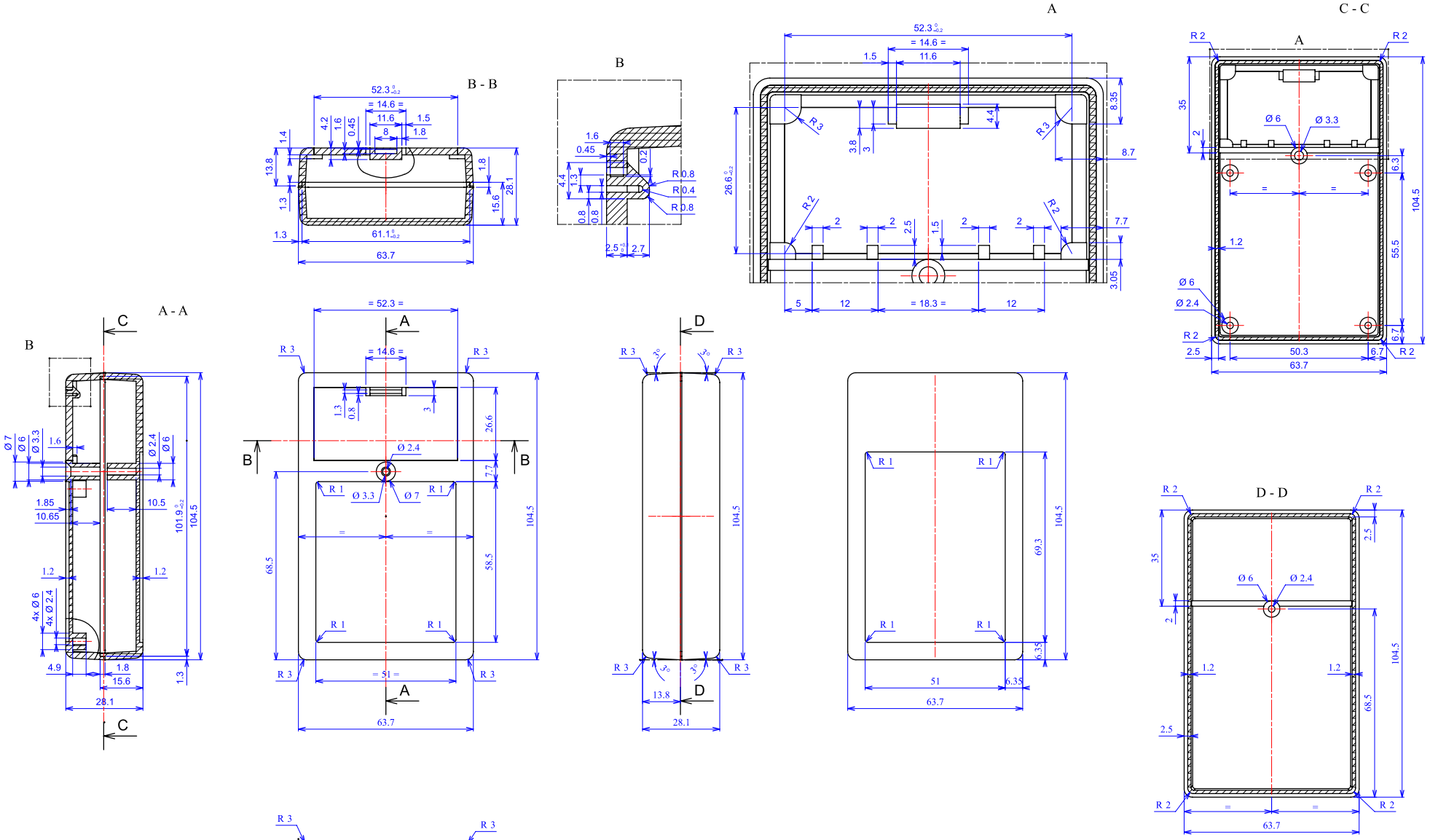

Z-55

Radiotech
(+7 495)795-08-05
www.rct.ru