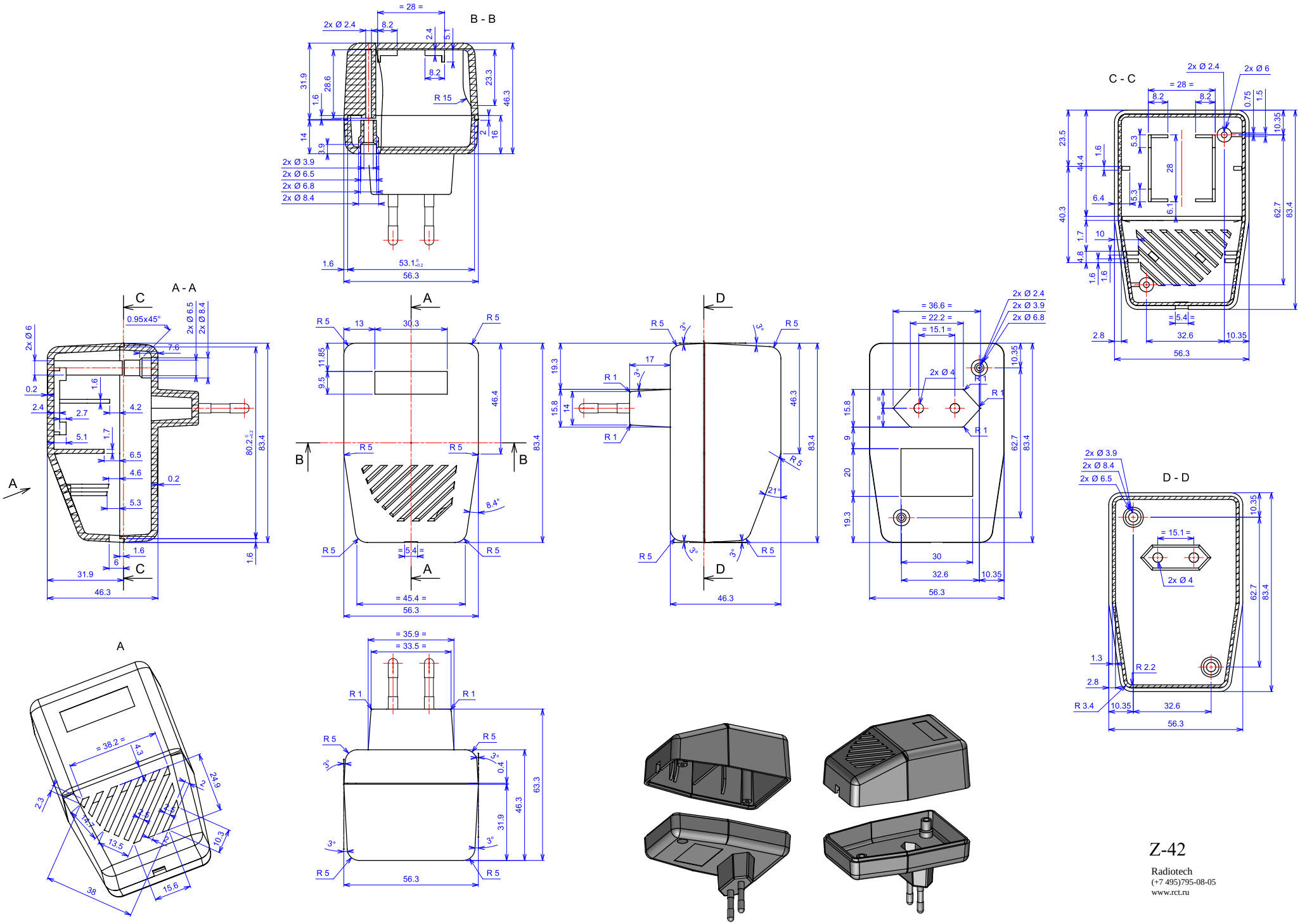
B - B
A - A
C - C
D - D
A
Z-42
Radiotech
(+7 495)795-08-05
www.rct.ru