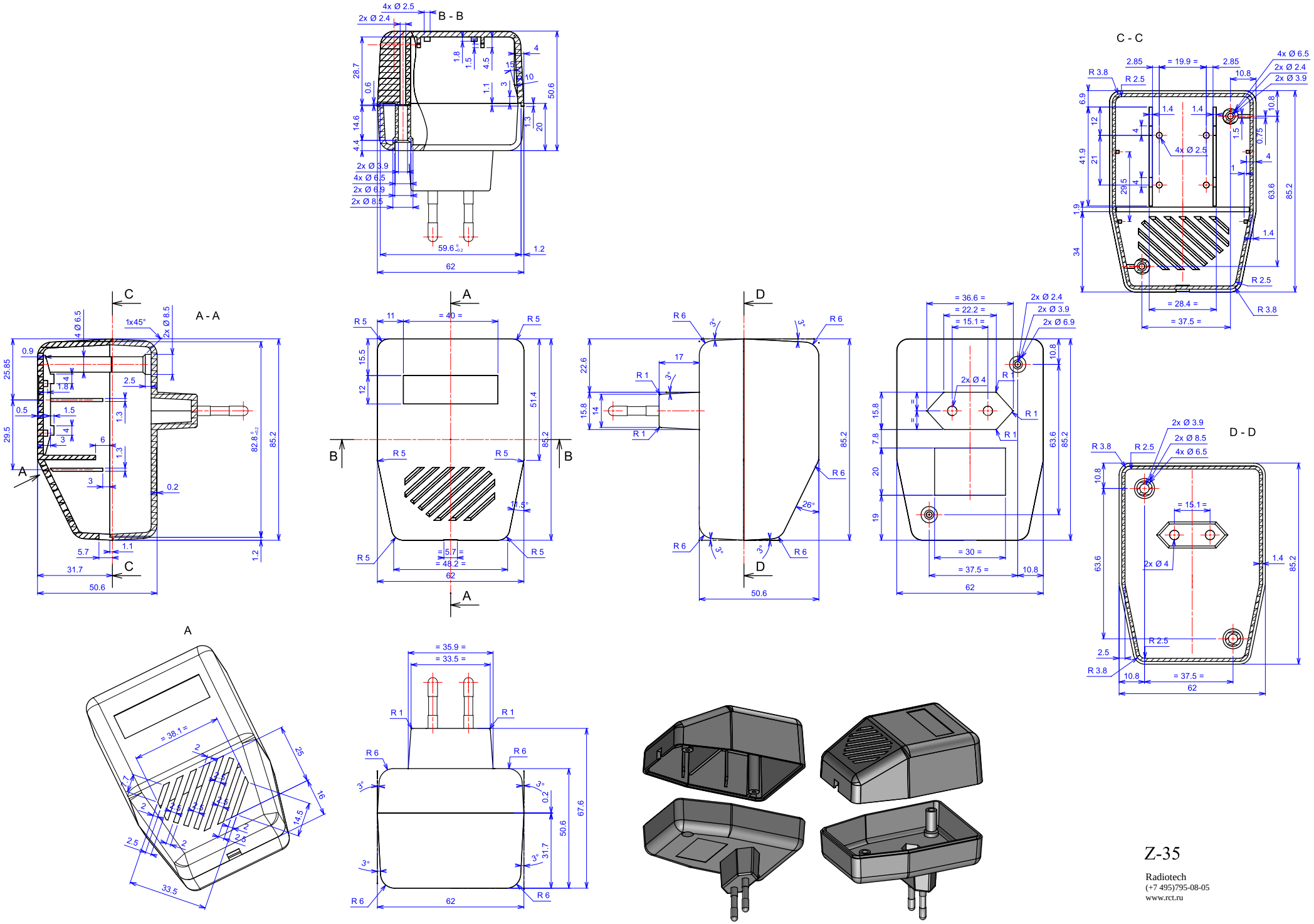
B - B
C - C
A - A
D - D
A
4x Ø 2.5
2x Ø 2.4
2x Ø 3.9
4x Ø 6.5
2x Ø 6.9
2x Ø 8.5
1x45°
2x Ø 4
= 35.9 =
= 33.5 =
= 38.1 =
= 40 =
= 48.2 =
= 36.6 =
= 22.2 =
= 15.1 =
= 19.9 =
= 28.4 =
= 37.5 =
= 30 =
R 1
R 2.5
R 3.8
R 5
R 6
62
50.6
85.2
63.6
67.6
Z-35
Radiotech
(+7 495)795-08-05
www.rct.ru