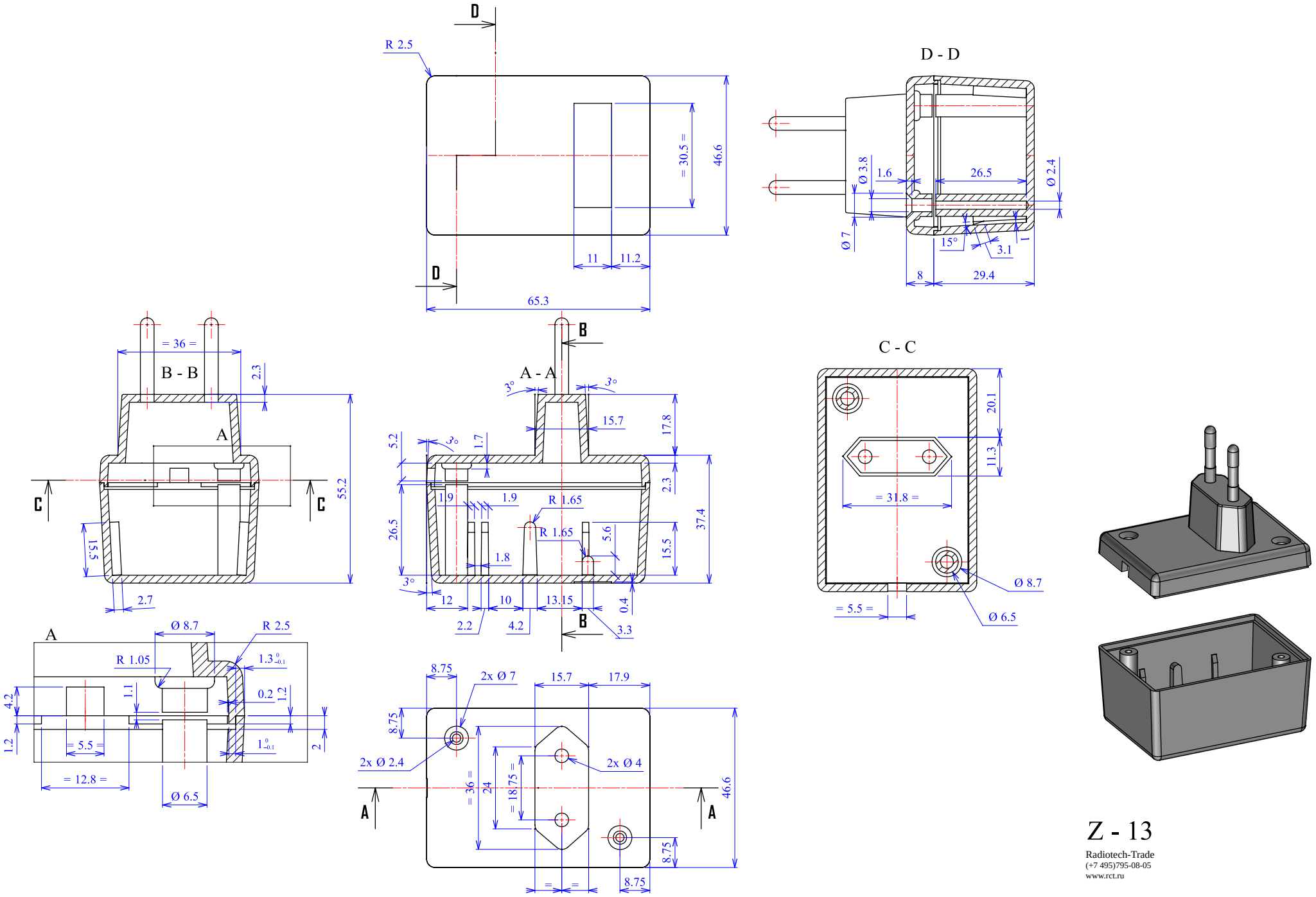
D
R 2.5
= 30.5 =
46.6
11
11.2
65.3
D - D
Ø 3.8
1.6
26.5
Ø 2.4
Ø 7
15°
3.1
1
8
29.4
B - B
= 36 =
2.3
A
C
55.2
15.5
2.7
A - A
3°
15.7
17.8
5.2
1.7
2.3
1.9
R 1.65
26.5
37.4
5.6
15.5
1.8
12
10
13.15
0.4
2.2
4.2
3.3
C - C
20.1
11.3
= 31.8 =
Ø 8.7
Ø 6.5
= 5.5 =
Ø 8.7
R 2.5
R 1.05
1.3
1.1
0.2
1.2
4.2
1.2
= 5.5 =
2
= 12.8 =
Ø 6.5
8.75
2x Ø 7
15.7
17.9
2x Ø 2.4
2x Ø 4
= 36 =
24
= 18.75 =
46.6
8.75
Z - 13
Radiotech-Trade
(+7 495)795-08-05
www.rct.ru