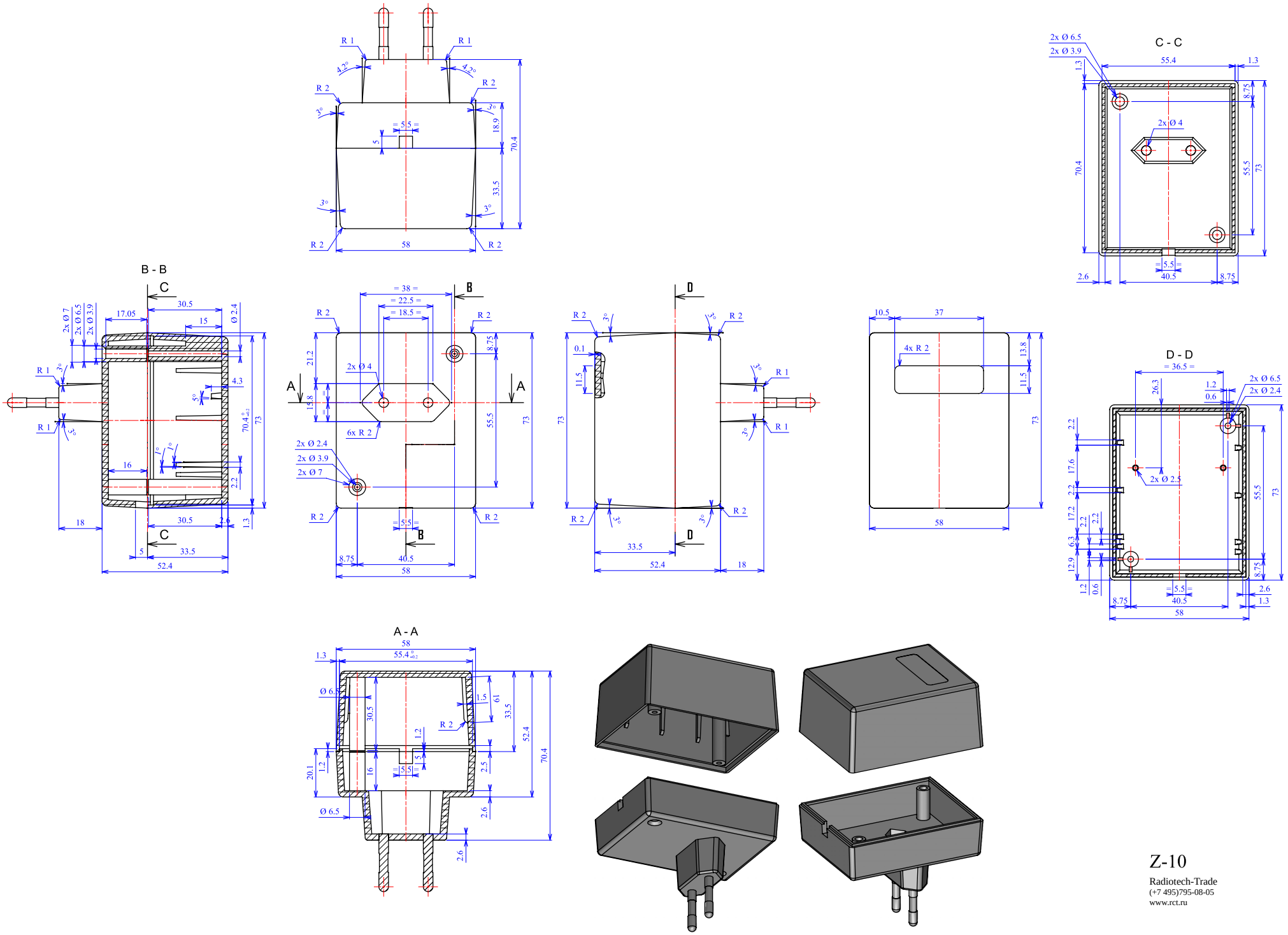

Z-10

Radiotech-Trade
(+7 495)795-08-05
www.rct.ru