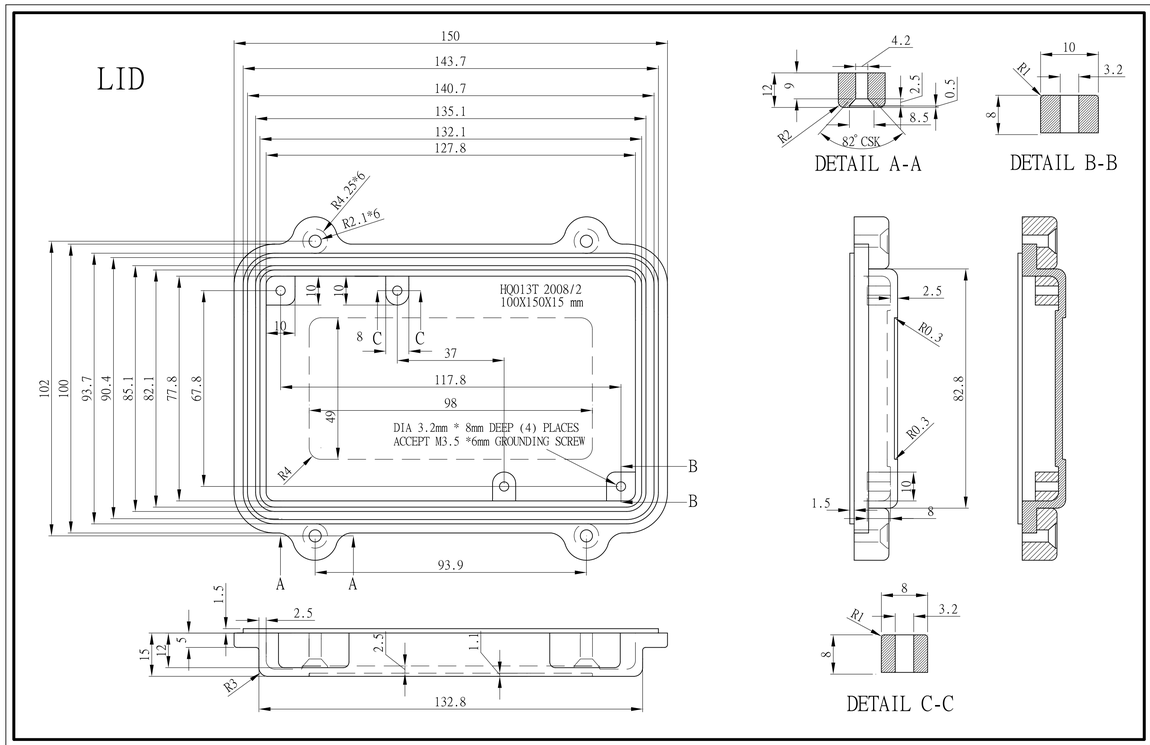

GAINTA INDUSTRIES LTD.	DES'D BY	DRA'D BY	CHK'D BY	SCALE	DATE	MATE.	TITLE:	DWG NO.:	REVISION	DESCRIPTION
		JACKY				ALUMINUM	HQ013T		A	

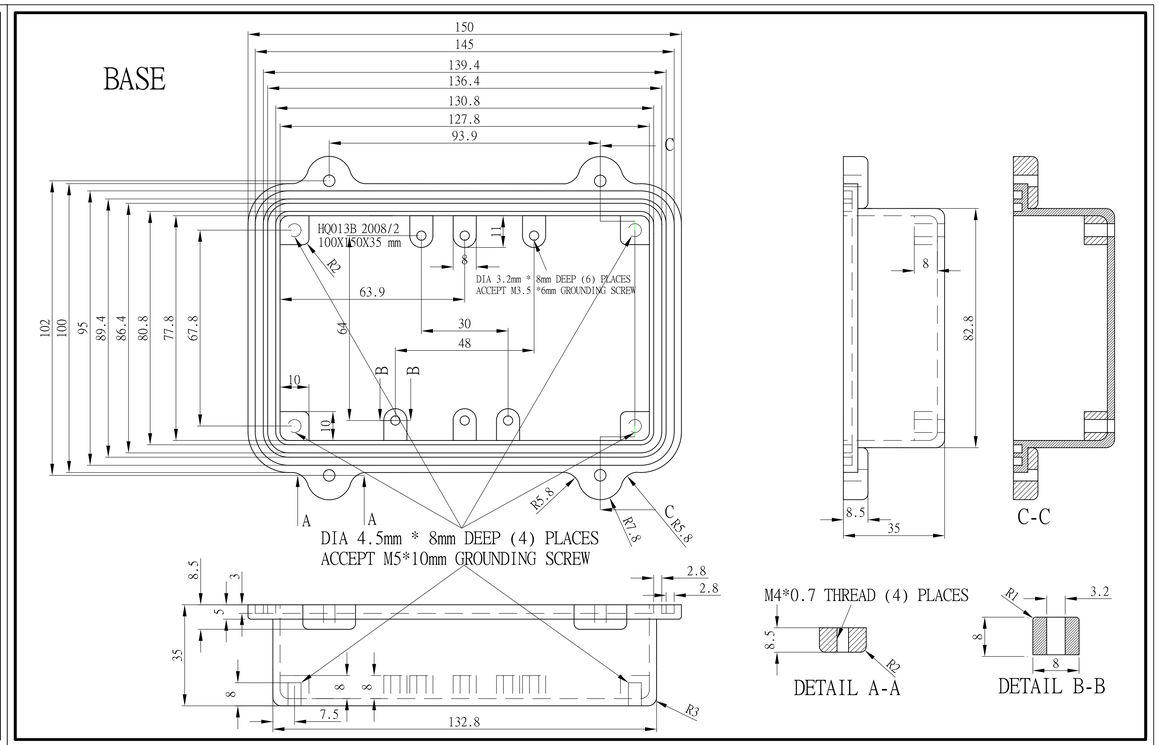

GAINTA INDUSTRIES LTD.	DES'D BY	DRA'D BY	CHK'D BY	SCALE	DATE	MATE.	TITLE:	DWG NO.:	REVISION	DESCRIPTION
		JACKY				ALUMINUM	HQ013B		A	

ITEM NO	DESCRIPTION
HQ013	NATURAL ALUMINIUM BOX(WITOUT THE GASKET)
HQ013S	@@ IP67 RATING @@(WITH THE SILICON GASKET)
HQ013EMS	@@ IP67 RATING @@(WITH THE SILICON & SHIELDED GASKET)

MATERIAL: ALUMINUM ALLOY #ADC-12

FINISH: NATURAL (NO SUFFIX)
GRAY (SUFFIX -LG)
BLACK (SUFFIX -BK)

1)FOUR(4) M4 x 20mm (0.787") LG. SCREWS
SUPPLIED FOR ASSEMBLY OF COVER TO BODY.
2) ALL HOLE DIAMETERS HAVE ±0.10mm TOLERANCE
ALL OTHER DIMENSIONS HAVE ±0.30 mm TOLERANCE

GAINTA INDUSTRIES LTD.	DES'D BY	DRA'D BY	CHK'D BY	SCALE	DATE	MATE.	TITLE:	DWG NO.:	REVISION	DESCRIPTION
		JACKY			2008/3/3	ALUMINUM	HQ013		A	