WW130-MT

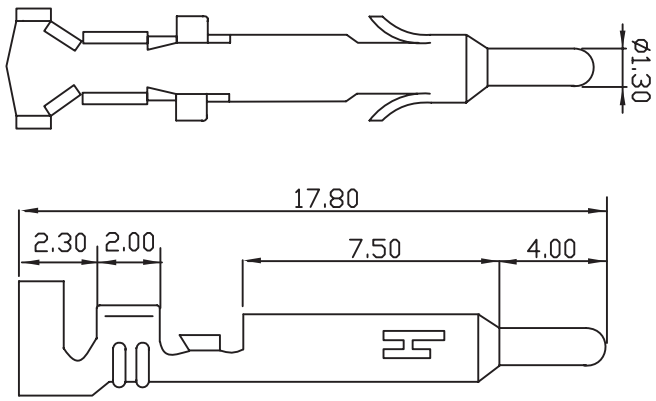

WW130-FT

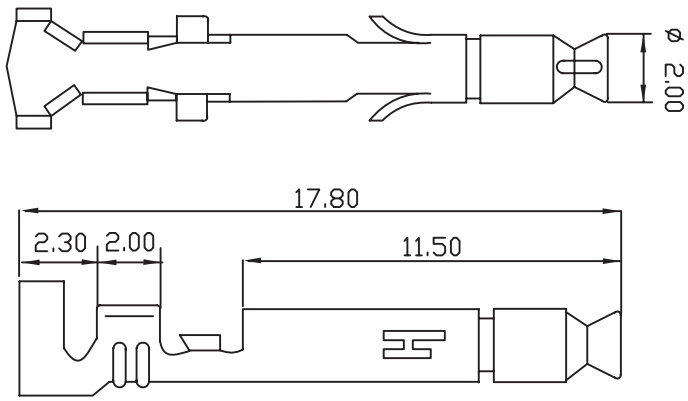

Part No.	Wire range		Material/	Thickness	Insulation	Reel
	Awg#	mm2	Finish	mm	O.D.(mm)	Pcs
WW130-M(F)T1	20-26	0.5-0.1	Brass/Tin	0.25	2.7-1.3	7,000
WW130-M(F)T2	16-20	1.3-0.5	Brass/Tin	0.25	3.4-1.9	5,000

Rev	Descripiton/Date	Drawn By: Storm.li	Customer:		Third angle projection	Units: mm
△		Checked By:Simmon	Part No.:	WW130-M&F	General Dimenson Tolerance	X.X ±0.25 X.XX ±0.1 X.XXX ±0.08
△		Approved By: Tony	Title:	Terminal		
SGS Report No.: KA/2005/40815/A-2						