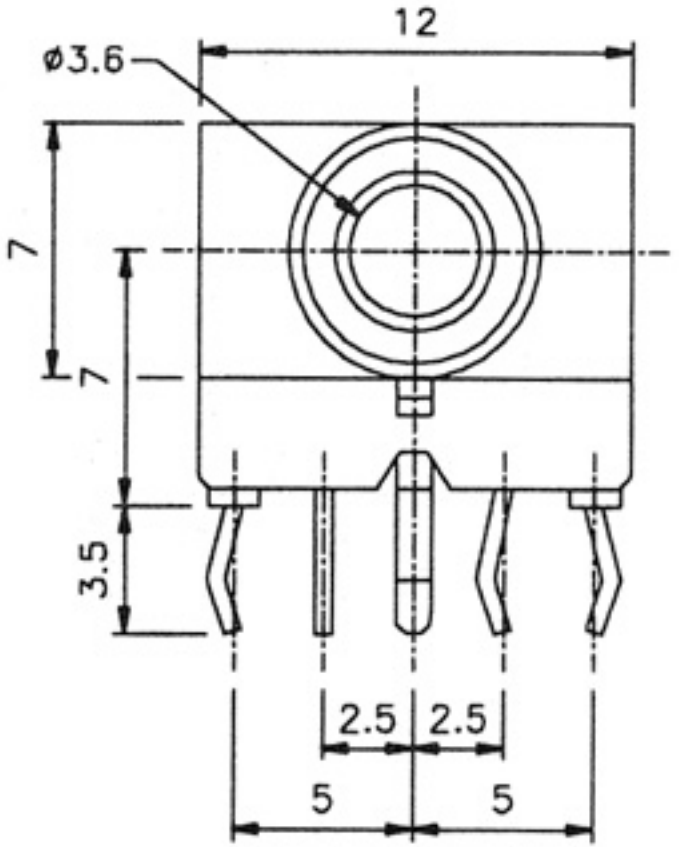

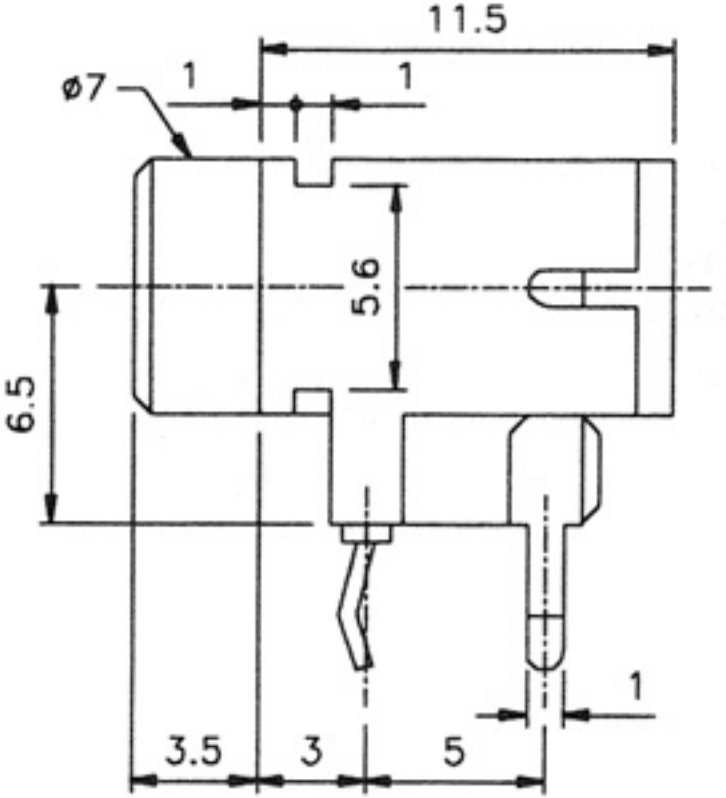

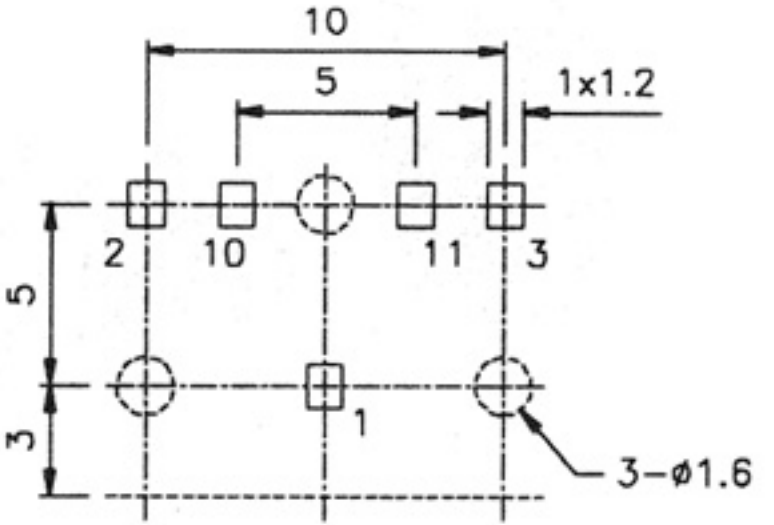

P.C.B. LAYOUT
(BOTTOM VIEW)

P/N: EJ035-3RT-06	P/N: EJ035-5-06
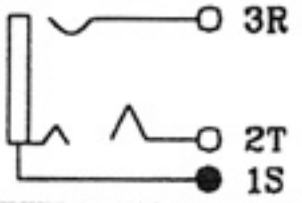	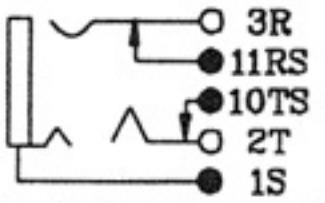

ø3.5mm